Manufacturer
630 Komas Drive | Suite 200
Salt Lake City | UT 84108 | USA
P +1 (801) 582-5533 | F +1 (801) 582-1509
www.blackrockmicro.com

CerePlex µ

Instructions for Use

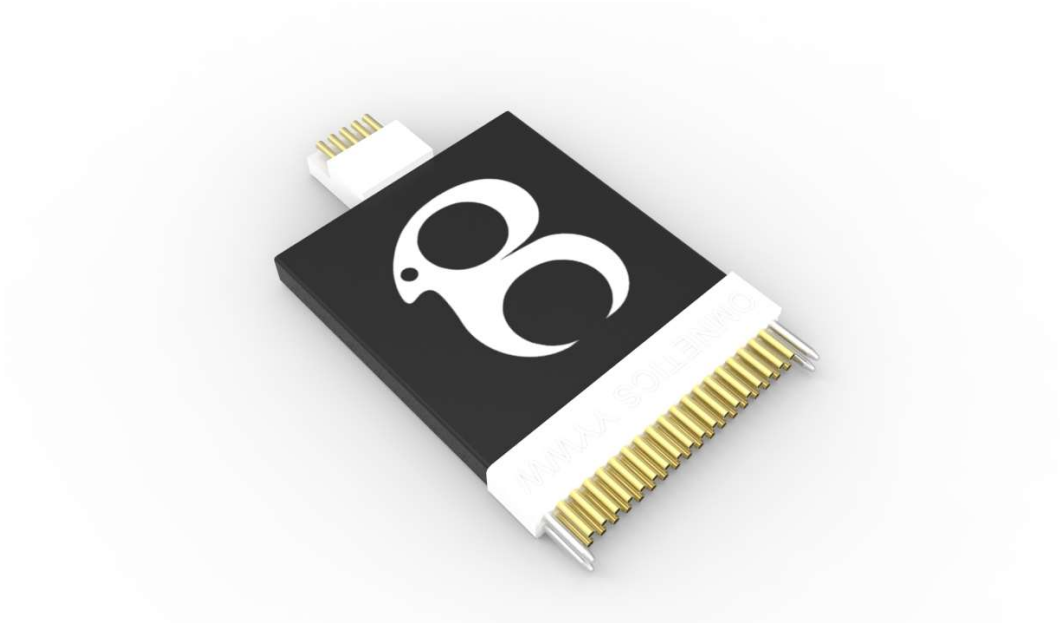

Revision 5.00 / LB-0729 – CerePlex µ IFU – 2020/08

Table of Contents

Warnings and Precautions

Warnings

- Do not touch any exposed electrical conductors when the CerePlex µ connector is attached to devices on subject's head as this may result in inducing electric charge to the neural tissue. Irreversible damage may occur.
- Do not use the CerePlex µ in the presence of flammable anesthetic agents or any other reagents.
- Avoid strong static discharges from sources like television or computer monitors because they can damage the electrical components of the system.
- Keep the CerePlex µ away from liquids. Contact with water, shower spray, or wet surfaces can lead to the subject receiving an electrical shock.
- Connection of external instruments to the CerePlex µ may compromise electrical safety.
- Always use antistatic or electrostatic discharge (ESD) safe gloves when connecting the CerePlex µ.
- Use only the supplied Blackrock Microsystems components (Cerebus™ system & Digital Hub128 or CerePlex Direct, CerePlex µ Cable). Substitution of components not supplied by Blackrock Microsystems may affect system performance and subject safety.
- Use caution when placing cables and other connectors to minimize the likelihood of tripping or accidentally pulling on cables. Pulled cables may cause damage to the CerePlex µ or any other connected devices.

Precautions

- Read this entire manual prior to using the device.

Specifications

Model Name	Blackrock CerePlex µ 32-Channel PN-9714
Power Requirements	+5 VDC, 70 mA maximum load
Resolution	16-bit ADC. 250 nV/bit
Sampling Frequency	30 kHz
Mode of Operation	Continuous
Input Frequency Range	0.3 Hz – 7.5 kHz
Input Impedance Range	1300 MΩ @ 10 Hz, 13 MΩ @ 1 kHz
Maximum Input Voltage	± 8.169 mV with respect to reference
Ingress Protection	Ordinary Equipment, not fluid resistant, IP20
Operating Environment	10˚C to 40˚C, 5 to 95% R.H. (non-condensing)
Storage Environment	-20˚C to 50˚C, 5 to 100% R.H. (non-condensing)
Input Connector	36-pin Omnetics part number A79023-001
Headstage Weight (without cable)	1.2g
Headstage Dimensions	13 mm x 20 mm

Model Name	Blackrock CerePlex µ 16-Channel PN-9162
Power Requirements	+5 VDC, 70 mA maximum load
Resolution	16-bit ADC. 250 nV/bit
Sampling Frequency	30 kHz
Mode of Operation	Continuous
Input Frequency Range	0.3 Hz – 7.5 kHz
Input Impedance Range	1300 MΩ @ 10 Hz, 13 MΩ @ 1 kHz
Maximum Input Voltage	± 8.169 mV with respect to reference
Ingress Protection	Ordinary Equipment, not fluid resistant, IP20
Operating Environment	10˚C to 40˚C, 5 to 95% R.H. (non-condensing)
Storage Environment	-20˚C to 50˚C, 5 to 100% R.H. (non-condensing)
Input Connector	18-pin Omnetics part number A79015-001
Headstage Weight (without cable)	1g
Headstage Dimensions	13 mm x 20 mm

What This Manual Covers

The Blackrock CerePlex μ provides an interface between the Cerebus recording system or the CerePlex Direct recording system for high fidelity transmission and recording of extracellular spikes and local field potentials from the brain. The Blackrock CerePlex μ converts analog signals to digital format right at the recording site which dramatically reduces the noise introduced to the signal during transmission. Moreover, the motion sensor on the CerePlex μ provides 3-axis accelerometer and 3-axis gyroscope at the headstage.

Hardware

Blackrock CerePlex µ 32 Headstage Pin-out

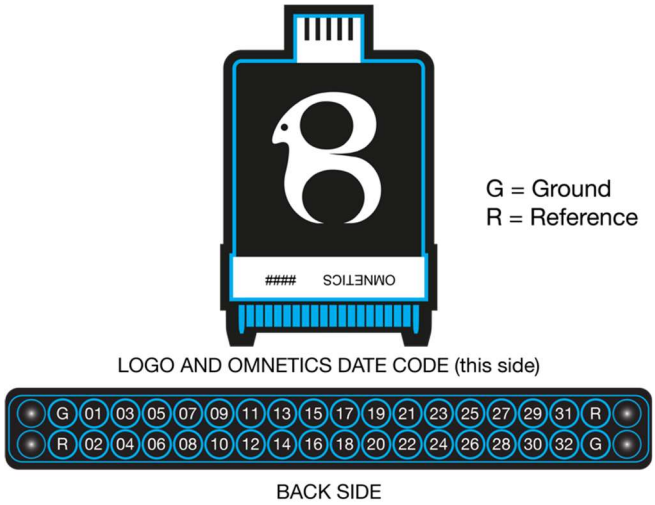

Blackrock CerePlex µ 16 Headstage Pin-out

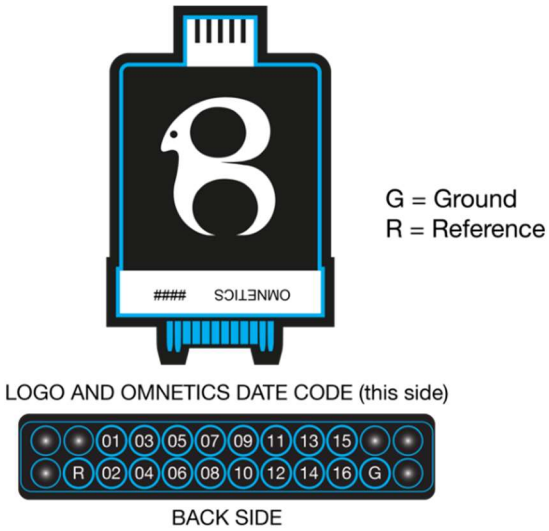

Figure 3-1–Top, CerePlex µ Input Connector Pin-Out. Be sure to note the side of the headstage that has the Omnetics date code to ensure the correct orientation.

CerePlex µ Headstage LED

Two infrared LEDs on the headstage can be used for video tracking using Blackrock's Neuromotive video tracking system. The LEDs can be turned on or off via the CerePlex µ Headstage Adaptor (see below).

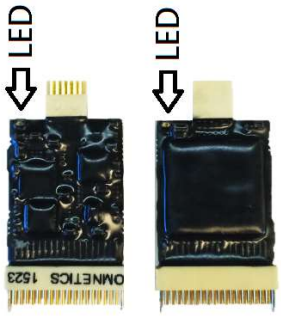

Figure 3-2–CerePlex µ LED location

CerePlex µ Headstage Motion Sensing

The motion sensing can be turned on and off via the HDMI adaptor. The CerePlex µ 32-Channel will occupy two 32-channel banks in Central when the Motion Sense Switch is ON; however, only the first 7 channels of the second bank will be occupied. For instance, if CerePlex µ is recording neural signal data on channels 1 to 32, channels 33-37 will contain the motion data when the When the Motion Sense Switch is OFF, the CerePlex µ 32-Channel will only occupy one 32-channel bank. The CerePlex µ 16-Channel will always occupy one 32-channel bank in Central regardless of the position of the Motion Sense Switch. Refer to the table in **Figure 3-3** for the motion data channel mapping and the axis orientations of each sensor.

The table in **Figure 3-3** shows the full-scale range for the motion sensors to allow conversion to the appropriate units. As with the neural data, motion data is saved to a file as 16-bit signed integers. When reading the file, multiply the accelerometer channels by 1.22 x 10-4 to convert the 16-bit integers to g, and the gyroscope channels by 0.0305 to convert the 16-bit integers to °/s.

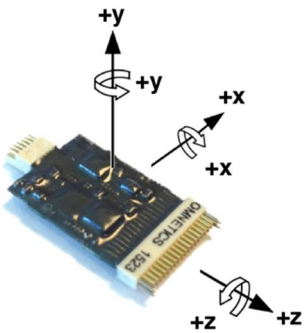

Figure 3-3–Motion sensor axis orientations, channel mapping, and conversion factors

Sensor Axis	Channels in Central µ 32	Channels in Central µ 16	Full-scale Range
Accelerometer X	34	18	± 4 *g*
Accelerometer Y	35	19	± 4 *g*
Accelerometer Z	33	17	± 4 *g*
Gyroscope X	38	22	± 1000 °/s
Gyroscope Y	39	23	± 1000 °/s
Gyroscope Z	37	21	± 1000 °/s

CerePlex µ Headstage Adaptor

The CerePlex µ headstage adaptor provides a simple and easy way to control the headstage. The three switches on the adaptor allow the user to control the LED on/off, motion sensing on/off, and impedance on/off. See **Figure 3-4** for switch locations.

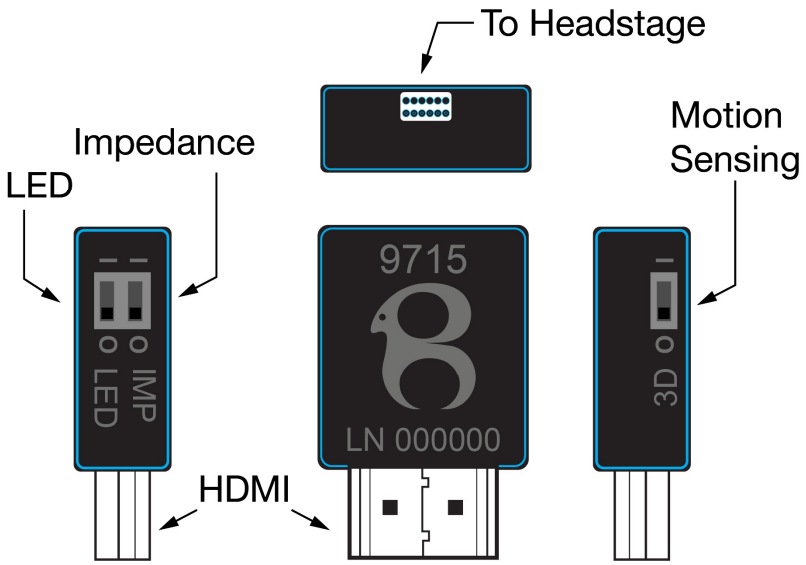

Figure 3-4–CerePlex µ Adaptor Switch Setup. | = ON position; O = OFF position.

Motion Sense Switch

The switch is located at the side of the adaptor and sends motion data when the switch is in the ON position

LED Switch

The two IR LEDs on the headstage will illuminate when this switch is in the ON position.

Impedance Switch

To select impedance mode, toggle the switch to the ON position. The CerePlex µ headstage should not be in Impedance mode while attempting to record neural signals. In Impedance mode, the CerePlex µ delivers to each electrode sequentially a 1 kHz, 1 nA peak-to-peak current for 100 ms. The CerePlex µ impedance measurements are accurate for electrodes between 10 kOhm and 2 MOhm.

In order to measure electrode impedances with the CerePlex µ the Central software must be configured to measure impedances using CerePlex Family headstages. This is only required once, unless the setting is subsequently changed. In the Central software, click on the TOOLS drop down box then select OPTIONS. Under Auto Impedance Interface, select “CerePlex Family”. Click OK. Next, click on the IMPEDANCE TESTER button. Populate the dialog box that appears on the screen if desired. Impedance values should be displayed on the screen. To exit impedance mode, close the Impedance Tester window, toggle the switch to OFF.

CerePlex µ Headstage Cabling

Cables are available in 1.5 ft and 2.5 ft lengths. Multiple cables can be daisy chained to create longer cable lengths. Note that, both connectors on the cable are keyed. Align the connectors before making connections to avoid damage to the pins.

Instructions for Assembly

1. If using a Cerebus recording system, turn off the power on the Digital Hub 128 before connecting. If using a CerePlex Direct, turn off the power before connecting.
2. Plug the input connector on the CerePlex µ into the connector attached to the electrodes or signal simulator.
3. Connect the cable to the CerePlex µ and the CerePlex µ adaptor.
4. Plug the HDMI connector on the adaptor to the connector on the back of the Digital Hub 128, or the front of the CerePlex Direct.
5. Make sure the connections are secured.
6. Turn on the power of the Digital Hub 128 or the CerePlex Direct.
7. After recording, turn off the Digital Hub 128 or CerePlex Direct before any disconnection.

Cleaning, Maintenance, and Disposal

Cleaning

The CerePlex µ may be cleaning with isopropyl alcohol (70%). Do not apply pressure to the circuit board or you may damage it. Let dry completely before use.

Maintenance

The CerePlex µ does not require maintenance.

Disposal

All devices, both used and unused, should not be disposed with household waste. Return to a recycling point for electric and electronic devices.

Magnetic Resonance

The CerePlex µ has not been evaluated for safety and compatibility in the MR environment. The CerePlex µ has not been tested for heating, migration, or image artifact in the MR environment.

Troubleshooting

Problem	Symptom	Failure	Potential fix
Poor Signal to Noise Ratio / Noisy Signal	A typical high-passed noise band is less than +/- 30 microvolts or approximately 60 microvolts peak to peak (roughly 10 root mean squared). If the signal that you are receiving is noisier than this, it could be due to a number of factors	Poor contact between device electrode connector	Electrode connections: Ensure the electrode has good ground contact with the subject. Check that the reference wires are exposed to tissue
Motion data is not being continuously transmitted to Central	Moving the headstage does not create any varying signal on channels 17–23 for the 16-channel µ or on channels 33–39 for the 32-channel µ	The HDMI adapter is not transmitting motion data from the µ's onboard accelerometer to the Direct or Digital Hub	Make sure the Motion Sense Switch is in the ON position. You can also try unplugging the HDMI Adapter from the CerePlex Direct or the Digital Hub, and plugging it back in
	Motion data comes through intermittently	The µ cable's wire carrying motion data has become compromised	Switch out the µ cable if one is available
Non-Green Light on Digital Hub Bank	The indicator light on the Digital Hub for the bank that the CerePlex µ is attached to should be green.	If it is not green, it could mean that your device is damaged or malfunctioning or it could mean that you are using an unapproved or damaged digital data cable between the Digital Hub and the CerePlex µ	Try changing the cable to a Blackrock approved cable
		It could also mean that the Digital Hub is malfunctioning	Try changing which bank that the CerePlex µ is connected to. If the problem persists, contact Blackrock Support for assistance

Warranty

Blackrock Microsystems ("Blackrock") warrants its products are free from defects in materials and manufacturing for a period of one year from the date of shipment. At its option, Blackrock will repair or replace any product that does not comply with this warranty. This warranty is voided by: (1) any modification or attempted modification to the product done by anyone other than an authorized Blackrock employee; (2) any abuse, negligent handling or misapplication of the product; or (3) any sale or other transfer of the product by the original purchaser.

Except for the warranty set forth in the preceding paragraph, Blackrock provides no warranties of any kind, either express or implied, by fact or law, and hereby disclaims all other warranties, including without limitation the implied warranties of merchantability, fitness for a particular purpose, and non-infringement of third-party patent or other intellectual property rights.

Blackrock shall not be liable for special, indirect, incidental, punitive, exemplary or consequential damages (including without limitation, damages resulting from loss of use, loss of profits, interruption or loss of business or other economic loss) arising out of non-compliance with any warranty. Blackrock's entire liability shall be limited to providing the remedy set forth in the previous paragraph.

Return Merchandise Authorization (RMA)

In the unlikely event that your CerePlex µ needs to be returned to Blackrock for repair or maintenance, do not send any equipment back without a Return Merchandise Authorization Number. An RMA number will be issued to you by a Blackrock representative. If you need to obtain an RMA number, you may contact a product support representative at +1 (801) 582-5533 or by emailing support@blackrockmicro.com.

Once an RMA number has been issued, it is important to safely pack the returned item for shipping back to Blackrock. It is preferred that you save the original boxes and packing materials that your system arrived in for return shipment. Please address the package as follows:

Blackrock Microsystems, LLC
ATTN: RMA#
630 S. Komas Dr., Suite 200
Salt Lake City, UT 84108 USA
Tel: +1 (801) 582-5533

Support

Blackrock prides itself in its customer support. For additional information on this product or any of our products, you can contact our Support team through the contact information below:

Manuals, Software Downloads, and Application Notes
www.blackrockmicro.com/technical-support

Complaints

When filing a complaint, please provide the product description, product number, software version, lot number, complainant's name and address, and the nature of the complaint.

Issues or Questions
www.blackrockmicro.com/technical-support
support@blackrockmicro.com
U.S.: +1 (801) 582-5533

The CerePlex µ is not for use on human subjects.